聚倍科技集团
JUBEI TECHNOLOGY GROUP

Comprehensive service provider for one-stop products of full scene water purification system

Control Core Technology Full Scenario
Full production chain R&D compound Group

ALTRUISM IS LIKE WATER
GATHER MOMENTUM AND EMPOWER



JUBEI GROUP – M5 – 2000GPD



Catalogue

Product overview



1. Product specification and function description
2. Product id and cfm
3. Product 3d view and measements
4. Product ui interface
4. Product core selling points

PRODUCT SPECIFICATION AND FUNCTION DESCRIPTION

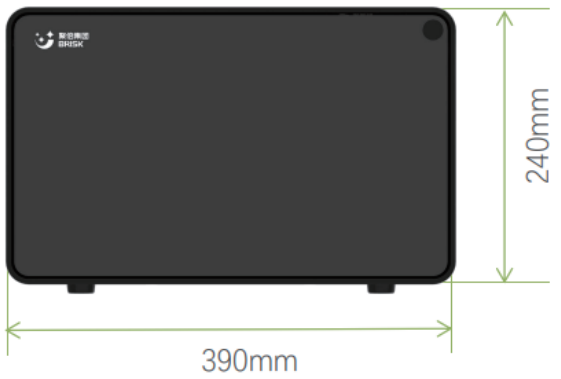

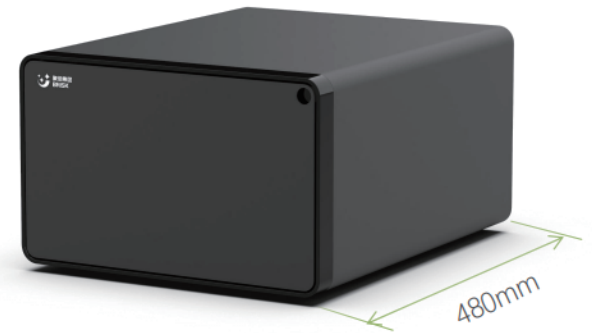

Model	M5- 2000GPD	
Feature	1st filter	PP+CB
	2nd filter	PP+CB
	3rd stage	800GPD ROX2
	4rd stage	800GPD ROX1
	Life indicator	Yes
Specification	Capacity(L)	6000L
	Flow rate(L/min)	5.2L
	Recovery	2:1
	Inlet water pressure	0.1-0.4MPa
	Inlet water temp.(°C)	5~38
	Tube size	Inlet3/8" X2 outlet3/8"
Dimension	W*D*H(mm)	390*480*240
	Status	Mass production

PRODUCT ID & CFM

CFM

COL .OR, FINISH & MATERIAL

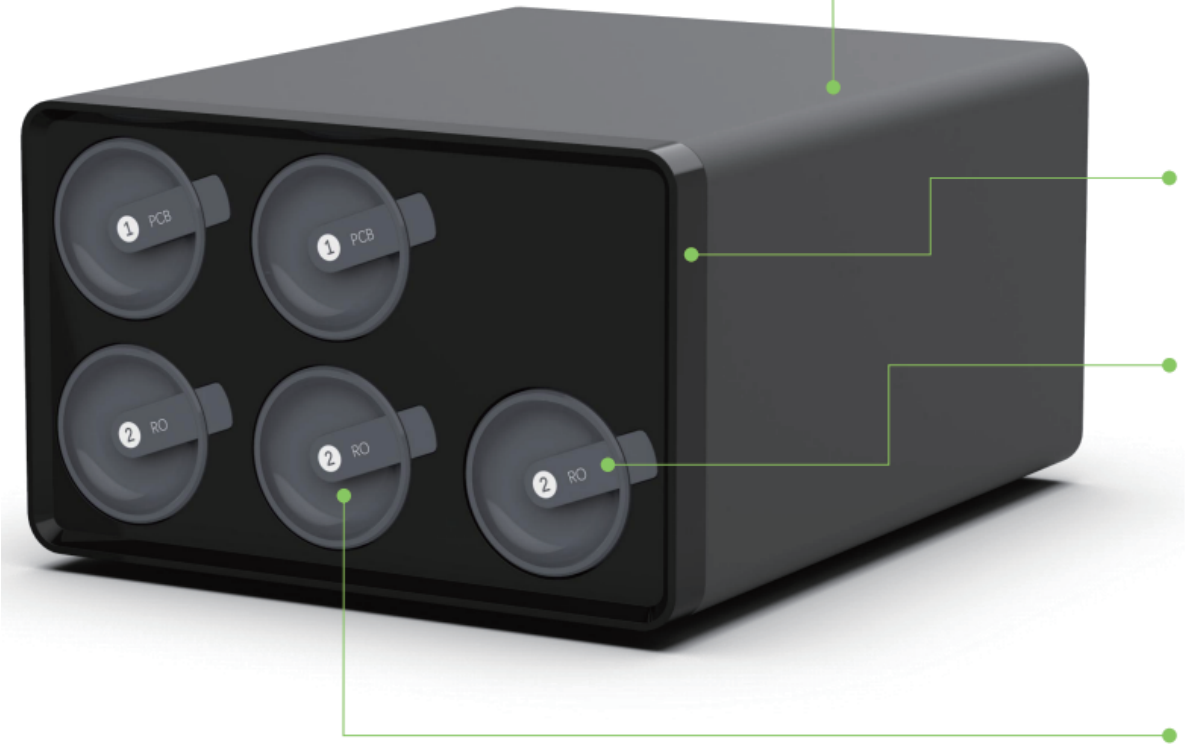

U TYPE FRAME:
COLOR: GREY
TREATMENT ON SURFACE:MATTE SANDING
MATERIAL: SGCC T=0.8MM

FRONT BOARD:
COLOR: BLACK
TREATMENT ON SURFACE:HIGH LIGHT
MATERIAL:ABS+PC

BUTTON + HANDLE
COLOR: GREY
MATERIAL:ABS CHIMEI PA 707

CARTRIDGE COVER
COLOR: GREY
TREATMENT ON SURFACE: HIGH LIGHT
MATERIAL: ABS CHIMEI PA 70

PRODUCT 3D VIEW AND MEASEMENTS

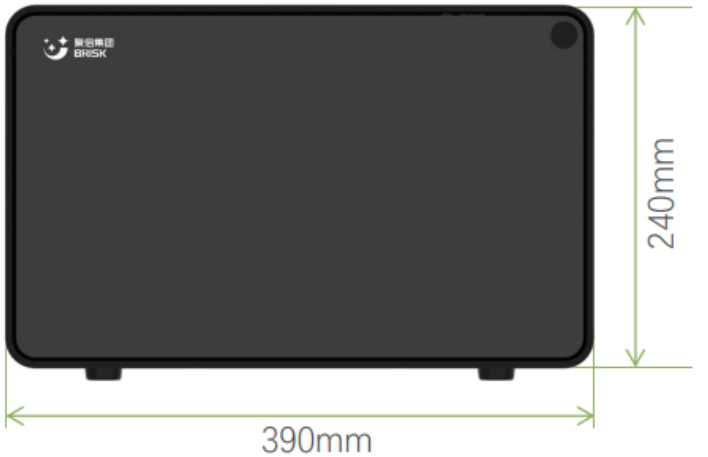

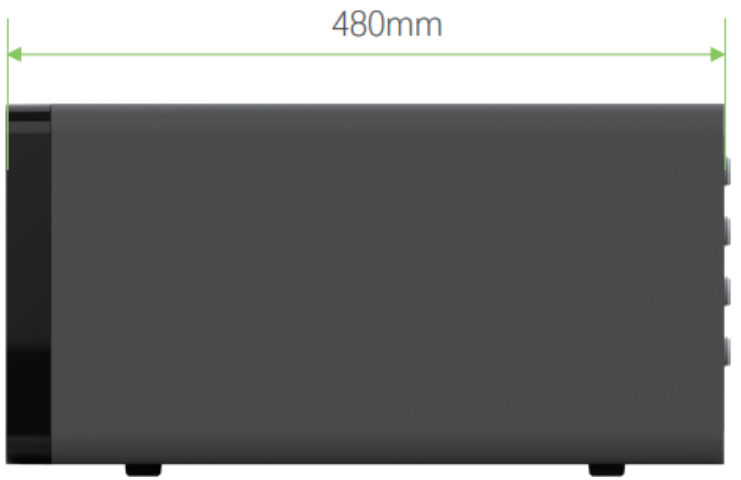



Cartridge Replacement Interface

PRODUCT UI INTERFACE – FRONT COVER





PRODUCT UI INTERFACE – BACK COVER



- Power Connector
- Inlet/outlet Connector

聚倍科技集团
JUBEI TECHNOLOGY GROUP

Comprehensive service provider for one-stop products of full scene water purification system

PRODUCT CORE SELLING POINTS



- Direct Drinking
  No Pressure Vessel
- 2000gpd
  High Efficiency Ro Film
- High Flow
  Pure Water Flow Up To
  5.2l/min
- Low Waste Water
- Boosting Pump
  Dual Head Low Noise Pump
- Quick Cartridge Replace-
  ment
  Simple And Fast Cartridge
  Replacement
- Intelligent Washing
  Prolong The Ro Service Life
- Compact Size
  W390*d480*h240mm

聚倍科技集团
JUBEI TECHNOLOGY GROUP

利他如水 聚势赋能

ALTRUISM IS LIKE WATER
GATHER MOMENTUM AND EMPOWER

